2026 Tennessee Top Bean Soybean Yield Contest

FORM A: CONTEST FIELD MEASUREMENT

Contestants Name: _____ Date: _____

Farm Name: _____ County: _____

Draw a Diagram of the Soybean Field & Harvested Area. Include all measurements of the harvested area.

Example:

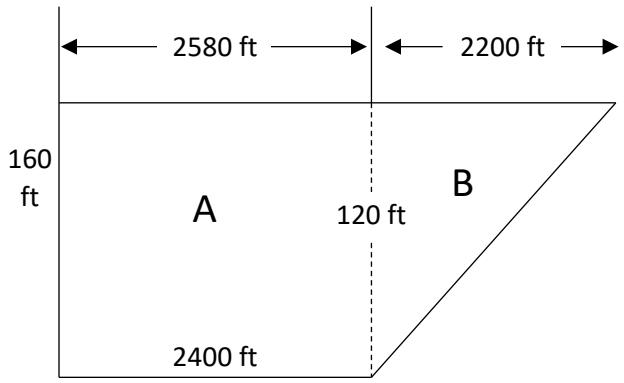

Measure all sides of the harvest area with a measuring wheel, a steel tape or fiberglass tape. Rowed beans are measured from the middle of the outside row spaces. Calculation of harvested area should be accomplished by breaking harvested area into the largest rectangle possible and calculating the rest of the areas as triangles.

CALCULATION OF YIELD

Area of Rectangles:

_____ Section _____ Length (ft) x _____ Width (ft) = _____ ft^2

_____ Section _____ Length (ft) x _____ Width (ft) = _____ ft^2

Area of Triangles:

_____ Section _____ Height (ft) x _____ Width (ft) x 0.5 = _____ ft^2

_____ Section _____ Height (ft) x _____ Width (ft) x 0.5 = _____ ft^2

Total Area:

_____ Total ft^2 ÷ 43,560 ft^2 = _____ Acres
3 decimals

CALCULATION OF YIELD

Area of Rectangles:

A Section $\frac{2580+2400}{2}$ Length (ft) x $\frac{160+120}{2}$ Width (ft) = 348,600 ft^2

Area of Triangles:

B Section 120 Height (ft) x 2200 Width (ft) x 0.5 = 132,000 ft^2

Total Area:

480,600 Total ft^2 ÷ 43,560 ft^2 = 11.033 Acres (3 decimals)

SEND COMPLETED FORMS TO: Ryan Blair, 605 Airways Blvd., Jackson, TN 38301
rblair2@utk.edu